TIL SALG PÅ 123MC.DK

SÆLGER

	Sydfyns MC Service	Email	**sydfynmc@mail.dk**
	Møllevej 19 Ulbølle	Telefon	**62241635 / 40377224**
	5762 Vester Skerninge	CVR	**11524494**

ANNONCE

33410-26E01 COIL ASSY,IGNIT. Tændspole

Pris kr. 1.402 ,-

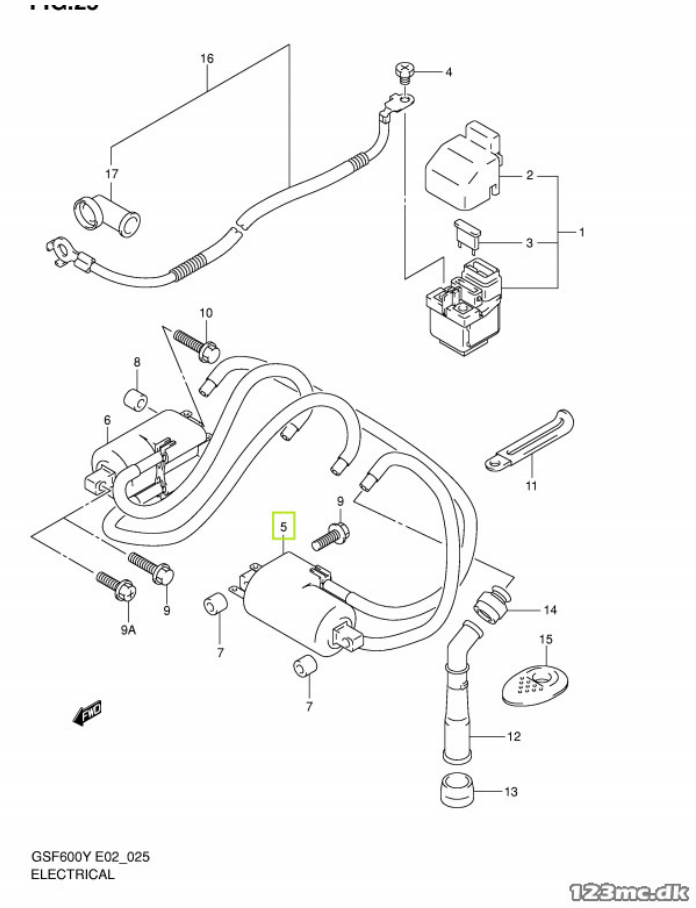

Passer til **Suzuki**

Sælgers beskrivelse

Passer til Suzuki , NYT. Passer på. 1995 GSF600 ELECTRICAL 1995 GSF600 ELECTRICAL 1996 GSF1200 ELECTRICAL (GSF1200ST/SV/SW/SX/SY) 1996 GSF1200 ELECTRICAL (GSF1200T/V/W/X/Y/ST/SV/SW/SX/SY) 1996 GSF1200 ELECTRICAL (GSF1200T/V/W/X/Y/ST/SV/SW/SX/SY) 1996 GSF1200 ELECTRICAL (GSF1200T/V/W/X/Y/ST/SV/SW/SX/SY) 1996 GSF1200 ELECTRICAL (GSF1200T/V/W/X/Y/ST/SV/SW/SX/SY) 1996 GSF1200 ELECTRICAL (GSF1200T/V/W/X/Y/ST/SV/SW/SX/SY) 1996 GSF600 ELECTRICAL 1996 GSF600 ELECTRICAL 1996 GSF600 ELECTRICAL 1996 GSF600 ELECTRICAL 1997 GSF1200 ELECTRICAL (GSF1200ST/SV/SW/SX/SY) 1997 GSF1200 ELECTRICAL (GSF1200T/V/W/X/Y/ST/SV/SW/SX/SY) 1997 GSF1200 ELECTRICAL (GSF1200T/V/W/X/Y/ST/SV/SW/SX/SY) 1997 GSF1200 ELECTRICAL (GSF1200T/V/W/X/Y/ST/SV/SW/SX/SY) 1997 GSF1200 ELECTRICAL (GSF1200T/V/W/X/Y/ST/SV/SW/SX/SY) 1997 GSF600 ELECTRICAL1997 GSF600 ELECTRICAL 1997 GSF600 ELECTRICAL 1997 GSF600 ELECTRICAL 1998 GSF1200 ELECTRICAL (GSF1200ST/SV/SW/SX/SY) 1998 GSF1200 ELECTRICAL (GSF1200T/V/W/X/Y/ST/SV/SW/SX/SY) 1998 GSF1200 ELECTRICAL (GSF1200T/V/W/X/Y/ST/SV/SW/SX/SY) 1998 GSF1200 ELECTRICAL (GSF1200T/V/W/X/Y/ST/SV/SW/SX/SY) 1998 GSF1200 ELECTRICAL (GSF1200T/V/W/X/Y/ST/SV/SW/SX/SY) 1998 GSF600 ELECTRICAL 1998 GSF600 ELECTRICAL 1998 GSF600 ELECTRICAL 1998 GSF600 ELECTRICAL 1998 GSF600 ELECTRICAL 1999 GSF1200 ELECTRICAL (GSF1200ST/SV/SW/SX/SY) 1999 GSF1200 ELECTRICAL (GSF1200T/V/W/X/Y/ST/SV/SW/SX/SY) 1999 GSF1200 ELECTRICAL (GSF1200T/V/W/X/Y/ST/SV/SW/SX/SY) 1999 GSF1200 ELECTRICAL (GSF1200T/V/W/X/Y/ST/SV/SW/SX/SY) 1999 GSF1200 ELECTRICAL (GSF1200T/V/W/X/Y/ST/SV/SW/SX/SY)1999 GSF600 ELECTRICAL 1999 GSF600 ELECTRICAL 1999 GSF600 ELECTRICAL 1999 GSF600 ELECTRICAL 2000 GSF1200 ELECTRICAL (GSF1200ST/SV/SW/SX/SY) 2000 GSF1200 ELECTRICAL (GSF1200T/V/W/X/Y/ST/SV/SW/SX/SY) 2000 GSF1200 ELECTRICAL (GSF1200T/V/W/X/Y/ST/SV/SW/SX/SY) 2000 GSF1200 ELECTRICAL (GSF1200T/V/W/X/Y/ST/SV/SW/SX/SY) 2000 GSF1200 ELECTRICAL (GSF1200T/V/W/X/Y/ST/SV/SW/SX/SY) 2000 GSF600 ELECTRICAL 2000 GSF600 ELECTRICAL 2000 GSF600 ELECTRICAL 2000 GSF600 ELECTRICAL 2001 GSF1200 ELECTRICAL 2001 GSF1200 ELECTRICAL 2001 GSF600 ELECTRICAL 2001 GSF600 ELECTRICAL2001 GSF600 ELECTRICAL 2002 GSF1200 ELECTRICAL 2002 GSF1200 ELECTRICAL 2002 GSF600 ELECTRICAL 2002 GSF600 ELECTRICAL 2002 GSF600 ELECTRICAL 2002 GSF600 ELECTRICAL 2003 GSF1200 ELECTRICAL 2003 GSF1200 ELECTRICAL 2003 GSF600 ELECTRICAL 2003 GSF600 ELECTRICAL 2003 GSF600 ELECTRICAL 2003 GSF600 ELECTRICAL 2004 GSF1200 ELECTRICAL 2004 GSF1200 ELECTRICAL 2004 GSF1200 ELECTRICAL 2004 GSF600 ELECTRICAL 2004 GSF600 ELECTRICAL

Kviknr. 33552

30/4-2026