TIL SALG PÅ 123MC.DK

SÆLGER

	Sydfyns MC Service	Email	**sydfynmc@mail.dk**
	Møllevej 19 Ulbølle	Telefon	**62241635 / 40377224**
	5762 Vester Skerninge	CVR	**11524494**

ANNONCE

3LD-1637A-00 (3LD-1637A-01) ROD PUSH ASSY

Pris kr. 986 ,-

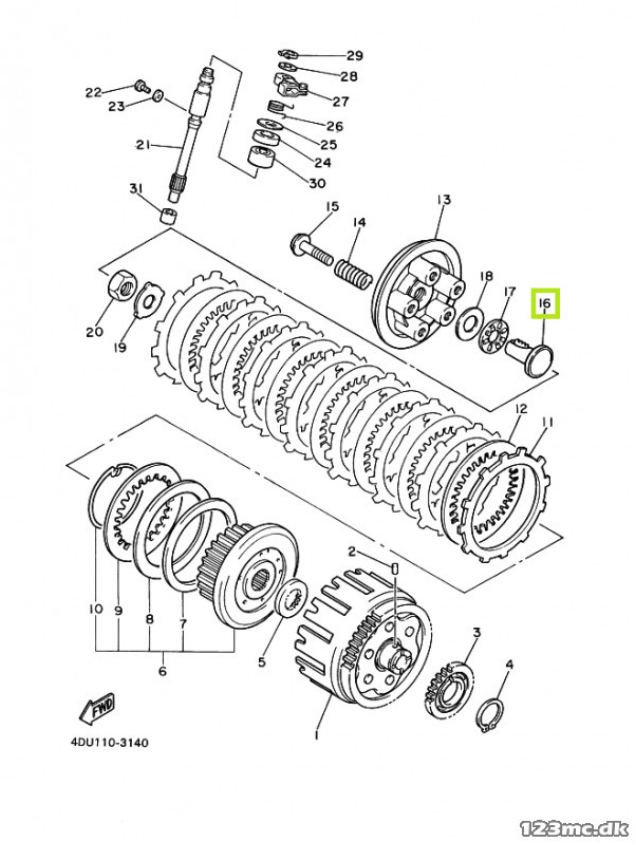

Passer til **Yamaha**

Sælgers beskrivelse

Passer til Yamaha , Nyt passer på. 1993 SUPERTENERE - XTZ750 EMBRAGUE 1993 SUPERTENERE - XTZ750 KUPPLUNG 1993 TDM850 CLUTCH 1993 TDM850 CLUTCH 1993 TDM850 CLUTCH 1993 TDM850 CLUTCH 1993 TDM850 EMBRAGUE 1993 WR200R CLUTCH 1994 DIVERSION - XJ600S CLUTCH 1994 DIVERSION - XJ600S CLUTCH 1994 DIVERSION - XJ600S CLUTCH 1994 DIVERSION - XJ600S EMBRAGUE 1994 DIVERSION - XJ600S KUPPLUNG 1994 SUPERTENERE - XTZ750 CLUTCH 1994 SUPERTENERE - XTZ750 CLUTCH 1994 SUPERTENERE - XTZ750 EMBRAGUE 1994 TDM850 CLUTCH 1994 TDM850 CLUTCH1994 TDM850 CLUTCH 1994 TDM850 CLUTCH 1994 TDM850 EMBRAGUE 1994 WR200R CLUTCH 1994 XJ600N CLUTCH 1994 XJ600N CLUTCH 1994 XJ600N CLUTCH 1994 XJ600N EMBRAGUE 1994 XJ600N KUPPLUNG 1995 DIVERSION - XJ900S CLUTCH 1995 DIVERSION - XJ900S CLUTCH 1995 DIVERSION - XJ900S EMBRAGUE 1995 SUPERTENERE - XTZ750 CLUTCH 1995 SUPERTENERE - XTZ750 CLUTCH 1995 SUPERTENERE - XTZ750 EMBRAGUE 1995 SUPERTENERE - XTZ750 EMBRAGUE 1995 TDM850 CLUTCH 1995 TDM850 CLUTCH1995 TDM850 CLUTCH 1995 TDM850 EMBRAGUE 1995 WR200R CLUTCH 1995 XJ600N CLUTCH 1995 XJ600N CLUTCH 1995 XJ600N CLUTCH 1995 XJ600N EMBRAGUE 1995 XJ600N KUPPLUNG 1995 XJ900S CLUTCH 1996 DIVERSION - XJ600S CLUTCH 1996 DIVERSION - XJ600S CLUTCH 1996 DIVERSION - XJ600S CLUTCH 1996 DIVERSION - XJ600S KUPPLUNG 1996 DIVERSION - XJ900S CLUTCH 1996 DIVERSION - XJ900S CLUTCH 1996 DIVERSION - XJ900S CLUTCH 1996 DIVERSION - XJ900S EMBRAGUE 1996 TDM850 ????1996 TRX850 KUPPLUNG 1996 XJ600N CLUTCH 1997 DIVERSION - XJ600S CLUTCH 1997 DIVERSION - XJ900S CLUTCH 1997 TDM850 CLUTCH 1997 TRX850 CLUTCH 1998 DIVERSION - XJ600S CLUTCH 1998 DIVERSION - XJ900S CLUTCH 1998 TDM850 CLUTCH 1998 XJ600N CLUTCH 1999 DIVERSION - XJ600S CLUTCH 1999 DT230 CLUTCH 1999 TDM850 CLUTCH 1999 XJ600N CLUTCH 2000 DIVERSION - XJ600S CLUTCH 2000 DIVERSION - XJ900S CLUTCH 2000 TDM850 CLUTCH 2000 XJ600N CLUTCH

Kviknr. 42729

30/4-2026