TIL SALG PÅ 123MC.DK

SÆLGER

	Sydfyns MC Service	Email	**sydfynmc@mail.dk**
	Møllevej 19 Ulbølle	Telefon	**62241635 / 40377224**
	5762 Vester Skerninge	CVR	**11524494**

ANNONCE

23121-07A00 (23121-31E00) PIECE,CLUTCH PUSH

Ring for pris

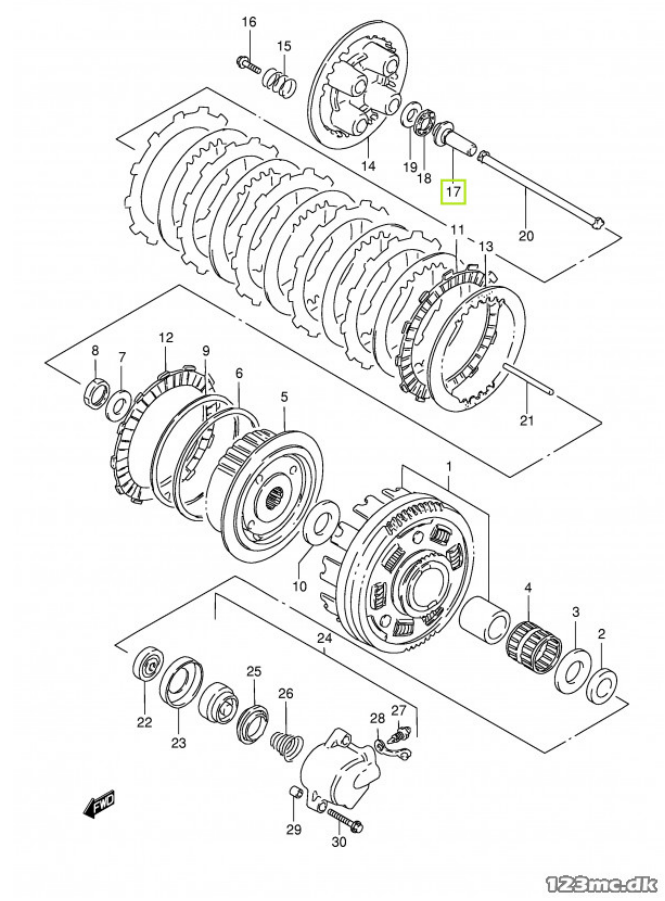

Passer til **Suzuki**

Sælgers beskrivelse

Passer til Suzuki , BRUGT PASSER PÅ 1985 VS750 CLUTCH 1986 VS750 CLUTCH 1986 VS750 CLUTCH 1986 VS750 CLUTCH 1987 VS750 CLUTCH 1987 VS750 CLUTCH 1987 VS750 CLUTCH 1988 GSX600 CLUTCH (MODEL N/P/R/S/T) 1988 GSX600 CLUTCH (MODEL N/P/R/S/T) 1988 GSX600 CLUTCH (MODEL N/P/R/S/T) 1988 GSX600 CLUTCH (MODEL N/P/R/S/T) 1988 GSX600 CLUTCH (MODEL N/P/R/S/T) 1988 GSX600 CLUTCH (MODEL N/P/R/S/T) 1988 VS750 CLUTCH 1988 VS750 CLUTCH 1988 VS750 CLUTCH 1989 GSX600 CLUTCH (MODEL N/P/R/S/T) 1989 GSX600 CLUTCH (MODEL N/P/R/S/T) 1989 GSX600 CLUTCH (MODEL N/P/R/S/T) 1989 GSX600 CLUTCH (MODEL N/P/R/S/T) 1989 GSX600 CLUTCH (MODEL N/P/R/S/T) 1989 GSX600 CLUTCH (MODEL N/P/R/S/T) 1989 GSX750 CLUTCH 1989 GSX750 CLUTCH 1989 GSX750 CLUTCH 1989 GSX-R1100 CLUTCH 1989 VS750 CLUTCH 1989 VS750 CLUTCH 1989 VS750 CLUTCH 1990 GSX750 CLUTCH 1990 GSX750 CLUTCH 1990 GSX750 CLUTCH 1990 GSX750 CLUTCH 1990 GSX-R1100 CLUTCH 1990 VS750 CLUTCH 1990 VS750 CLUTCH 1990 VS750 CLUTCH 1991 GSX1100 CLUTCH 1991 GSX1100 CLUTCH 1991 GSX750 CLUTCH 1991 GSX750 CLUTCH 1991 GSX750 CLUTCH 1991 GSXR1100 CLUTCH 1991 GSX-R1100 CLUTCH 1991 GSX-R1100 CLUTCH 1991 VS750 CLUTCH 1991 VS750 CLUTCH 1991 VS750 CLUTCH 1992 GSX1100 CLUTCH 1992 GSX1100 CLUTCH 1992 GSX600 CLUTCH (MODEL N/P/R/S/T) 1992 GSX600 CLUTCH (MODEL N/P/R/S/T) 1992 GSX600 CLUTCH (MODEL N/P/R/S/T) 1992 GSX600 CLUTCH (MODEL N/P/R/S/T) 1992 GSX600 CLUTCH (MODEL N/P/R/S/T) 1992 GSX600 CLUTCH (MODEL N/P/R/S/T) 1992 GSX750 CLUTCH 1992 GSX750 CLUTCH 1992 GSX750 CLUTCH 1992 GSXR1100 CLUTCH 1992 GSX-R1100 CLUTCH 1992 GSX-R1100 CLUTCH 1992 VS800 CLUTCH 1992 VS800 CLUTCH 1993 GSX1100 CLUTCH 1993 GSX1100 CLUTCH 1993 GSX600 CLUTCH (MODEL N/P/R/S/T) 1993 GSX600 CLUTCH (MODEL N/P/R/S/T) 1993 GSX600 CLUTCH (MODEL N/P/R/S/T) 1993 GSX600 CLUTCH (MODEL N/P/R/S/T) 1993 GSX750 CLUTCH 1993 GSX750 CLUTCH 1993 GSX750 CLUTCH 1993 GSX-R1100 CLUTCH (MODEL P/R) 1993 GSX-R1100 CLUTCH (MODEL P/R) 1993 VS800 CLUTCH 1993 VS800 CLUTCH 1994 GSX1100 CLUTCH 1994 GSX600 CLUTCH (MODEL N/P/R/S/T) 1994 GSX600 CLUTCH (MODEL N/P/R/S/T) 1994 GSX600 CLUTCH (MODEL N/P/R/S/T) 1994 GSX600 CLUTCH (MODEL N/P/R/S/T) 1994 GSX750 CLUTCH 1994 GSX750 CLUTCH 1994 GSX750 CLUTCH 1994 GSX-R1100 CLUTCH (MODEL P/R) 1994 GSX-R1100 CLUTCH (MODEL P/R) 1994 RF900 CLUTCH (MODEL R) 1994 RF900 CLUTCH (MODEL R) 1994 VS800 CLUTCH

Kviknr. 54544

29/4-2026